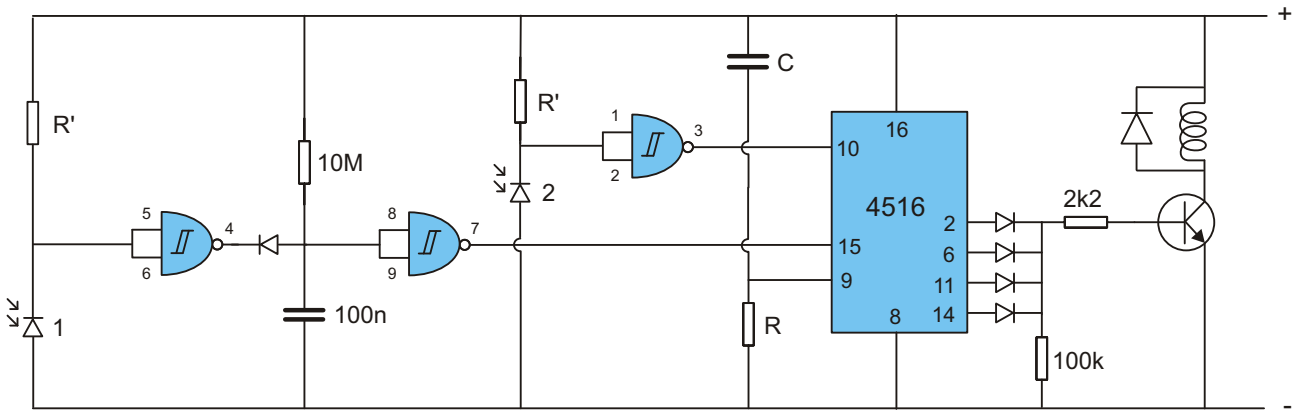

R'
10M
100n
1
R'
2
C
R
4516
2k2
100k
+
-

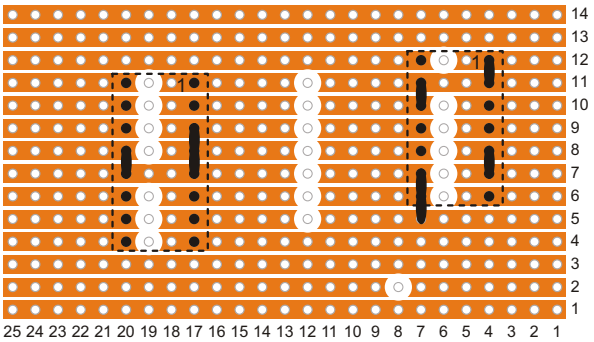

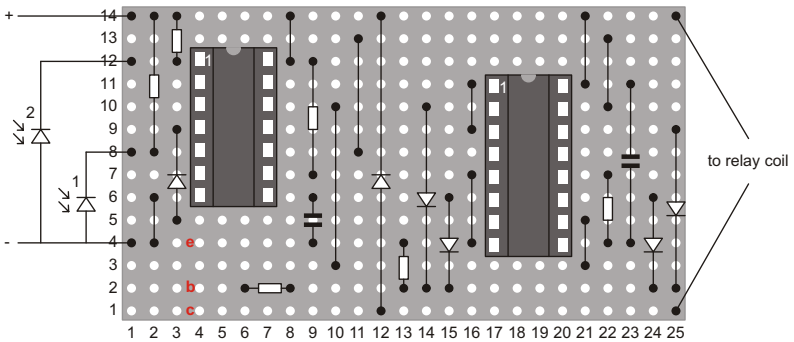

to relay coil